FALCO and FALCO^{TAC}

Instrument User Manual V1.3



Register your instrument online to receive your extended Warranty.

Pioneering Gas Sensing Technology.

ionscience.com

Register your instrument online for an extended warranty

Thank you for purchasing your Ion Science instrument.

The standard warranty for your FALCO 1.2 VOC Monitor is 1 year.

To receive your extended warranty, you must register your instrument online within one month of purchase (terms and conditions apply).

Click here to extend your instrument warranty, or scan the QR code below.

Contents

Contents **3**
Safety **6**
Legal Notices Regarding the Safe Operation of Equipment 6
Symbols 6
Warnings, Cautions and Information notifications 6
Disposal 8
Statements **9**
Responsibility for Correct Use 9
Warnings 9
Quality Assurance 9
Warranty 9
Service 9
Introduction to FALCO **10**
Technical Specification **11**
Un-Packing **12**
System Description **12**
Outputs and Communications 12
RS485 Modbus Interface **12**
Installation Requirements **14**
Location Requirements 14
Power Requirements 14
Cable and Gland Requirements 14
Installation **15**
Preparation for Installation 15
Dimensions for Installation 15
To Install the Housing Module 16
After-Installation Test 17
Installation in Zones with Explosive Atmospheres 17
Configurations of the 4 – 20 mA Current Loop **18**
Hydrophobic Filter **22**
Sampling Tube Length **22**
Removal of the Control Module **22**

To Remove the Control Module 22
CAUTION: 22
Operating the FALCO 23
User Interface 23
Status Light 23
Start-Up Routine 24
Logo Screen 24
Info screen 1 24
Info screen 2 24
Warm up 24
Normal Running Mode Screen 25
Software Screens 25
Software Flow Chart 25
Lock Screen 26
Navigating the Menus and Selecting Menu Options 26
Menu i1 27
Menu i2 27
Menu i3 28
Menu i4 28
Menu i5 28
Menu i6 29
Menu i7 29
Menu i8 29
Pump Operation 30
Calibration 30
Zero 30
NOTE: 31
Span 1 31
Span 2 32
RF (Response Factor) 32
Detection Units 33
Measurement Cycle 34
Alarms 34

Alarm 1 34
Alarm 2 35
Alarm Brightness 35
Alarm Pulsing 35
Relays 36
Relay 1 Options 36
Relay 2 Options 36
4 – 20 mA 36
4 – 20 mA Enable/Disable 36
4 - 20mA Range 37
Modbus Address 37
Status Light Brightness 37
Service Mode 37
Password Lock 38
Servicing 39
Bump Test 40
Cleaning the MiniPID 40
Reassembly 41
Use of PID Lamp Cleaning Kit A-31063 42
Hazard identification: 42
Handling: 42
Storage: 42
Keep container closed to prevent water adsorption and contamination. 42
Fault Diagnostics 42
Alarm and Fault Indications 42
Fault Conditions 42
Manual Log 44
Warranty 44
Register your instrument online for extended warranty 44
ION Science Contact Details 45

Safety

Legal Notices Regarding the Safe Operation of Equipment

- Whilst every attempt is made to ensure the accuracy of the information contained in this manual, ION Science accepts no liability for errors or omissions in the manual, or any consequences deriving from the use of information contained herein. It is provided “as is” and without any representation, term, condition or warranty of any kind, either expressed or implied.
- To the extent permitted by law, ION Science shall not be liable to any person or entity for any loss or damage which may arise from the use of this manual.
- We reserve the right at any time and without any notice to remove, amend or vary any of the content which appears in this manual.

Symbols

	**WARNING!** **USED TO INDICATE DANGER WARNINGS WHERE THERE IS A RISK OF INJURY OR DEATH.**
	**Caution** **Used to indicate a caution where there is a risk of damage to equipment.**
	**Information** Important information or useful hints about usage.
	**Recycling** Recycle all packaging.
	**WEEE Regulations** Ensure that waste electrical equipment is disposed of correctly.

Warnings, Cautions and Information notifications

The following Cautions apply to the product described in this manual.

	Inadequate performance of the gas detection equipment described in this manual may not necessarily be self-evident and consequently equipment must be regularly inspected and maintained.
	ION Science recommends that personnel responsible for equipment use institute a regime of regular checks to ensure it performs within calibration limits, and that a record be maintained which logs calibration check data.
	The equipment should be used in accordance with the safety standards and installation instructions given in this manual, and in compliance with local safety standards.

	Protect the PID sensor from exposure to silicone vapours as this may foul the windows of the lamps and reduce response to some gases. This can usually be remedied by polishing the lamp window with alumina powder.
	Do not use abrasive or chemical detergents to clean the Falco instrument as this may reduce the antistatic properties of the materials used, clean it using a damp cloth only.
	The Falco must not be exposed to atmospheres known to have an adverse effect on Thermoplastic Elastomers or Polycarbonate.
	Outside the items covered in this manual, the Falco must be serviced in a Non-Hazardous environment and by ION Science Ltd authorised service centres only. Substitution of components may impair intrinsic safety.
	Ingress Protection: Continuous exposure to wet weather conditions should be limited to less than one day and harsh water spray conditions should be avoided.
	Proper Use: If the equipment is used in a manner not specified by the manufacturer, the protection provided by the equipment may be impaired.

The following Warnings, Cautions and Information notifications appear later in this manual where they are applicable.

	IF AN ALARM STATE IS TRIGGERED THE USER SHOULD LEAVE THE HAZARDOUS ENVIRONMENT AND ACT IN ACCORDANCE WITH NATIONAL SAFETY REGULATIONS.
	THE CLEANING COMPOUND CONTAINS ALUMINIUM OXIDE AS A VERY FINE POWER. THIS MAY CAUSE IRRITATION OF RESPIRATORY TRACT AND EYES. (CAS Number 1344-28-1).

	Internal components must be handled with clean hands and clean tools. The lamp is fragile. Handle with great care. Never touch the window and do not drop.
	Never refit a damaged Lamp.
	The instrument MUST be re-calibrated after fitting a replacement or cleaned Lamp.

	The Falco has been designed to be used in hazardous environments

Important note: Always check the calibration in normal running before use by carrying out a bump test. Apply the same Zero and SPAN gas used to calibrate and ensure the correct readings are displayed.

Disposal

- The equipment does not include any toxic materials, but if it has been contaminated by toxic materials, then exercise due care and follow the appropriate regulations when disposing.
- Always adhere to local regulations and procedures when disposing of the equipment.
- Ion Science Ltd offers a take back service. Please contact us for more information.

RECYCLING
Recycle all Packing.

WEEE REGULATIONS
Ensure that all waste electrical equipment is disposed of correctly.

Statements

Responsibility for Correct Use

Ion Science Ltd accepts no responsibility for incorrect adjustments that cause harm or damage to persons or property. The users are responsible to respond appropriately to the readings and alarms given by FALCO.

Use the equipment in accordance with this manual, and in compliance with local safety standards.

Reduced performance of gas detection might not be obvious, so equipment must be inspected and maintained regularly. Ion Science recommends:

- you use a schedule of regular checks to ensure it performs within calibration limits, and that
- you keep a record of calibration check data.

Warnings

1. Read and understand this Manual fully before you install or operate the FALCO.
2. For safety, the FALCO must only be operated by qualified personnel.
3. All electrical work must be only carried out by competent persons.
4. Substitution of components can result in unsafe conditions and will invalidate the warranty.
5. Surface mount fuses must only be replaced by Ion Science service centres.

Quality Assurance

ION Science Ltd manufactures the FALCO instruments within an ISO 9001-compliant quality management system, which ensures that the equipment supplied to our customers has been designed and assembled reproducibly and calibrated to the stated standards before it leaves our factory.

Warranty

To receive your 2 Year Warranty, you must register within one month of purchase (Terms and Conditions apply). You will then receive a confirmation email that your Warranty Period has been activated and processed.

Full details, along with a copy of our Warranty Statement can be found by visiting: www.ionscience.com

Service

Ion Science recommends a twelve-month service replacement of the MiniPID sensor lamp.

Contact Ion Science or your local distributor for service options in your area.

Introduction to FALCO

The FALCO unit is a fixed detector for the continual monitoring and measuring of volatile organic compounds (VOCs) in the atmosphere. VOCs can be dangerous as they are poisonous to humans and there is a risk of explosion. VOCs are detectable using photo ionisation detection (PID) detector.

The FALCO's multi coloured LED status display screen can be seen from a distance of twenty metres in direct sunlight ensuring that personnel are alerted to hazards present.

The FALCO has five magnetic switches with LED confirmation, a high contrast OLED screen, and graphical interface ensuring quick and easy installation and servicing.

The magnetic switches are operated with a magnetic actuator that provides the actions of up, down, left, right and enter.

The main display uses organic light emitting diode (OLED) technology and the status bar uses light emitting diodes (LED). It also has a galvanically separated 4-20 mA current loop, Modbus (serial communication protocol) and two configurable switched contacts.

For protection in explosive areas the FALCO's Main Unit electronics are fitted in an ExD enclosure and the PID Sensor Head utilises intrinsically safe electronics.

The FALCO has two modules:

- The **Main Unit** (flameproof enclosure)
- The **PID Sensor Head** (intrinsically safe)

The externally located intrinsically safe PID Sensor Head allows servicing and calibration in a hazardous environment without having to isolate the power supply.

Technical Specification

Name	VOC Analyser Falco 1.2
Dimensions	h 291 mm, w 180 mm, d 125 mm
Weight	3.3 kg
Nominal Voltage	12V to 40Vdc (Powered from Safety Extra-Low (SELV))
Maximum Current	0.56 A at 12 V / 6.6 W 0.28 A at 24 V / 6.7 W 0.2 A at 40 V / 8 W
Maximum Power	8W
Typical Power	2W (depending on the LED intensity)
Supply Cables	0.5 to 2.5mm^2
Maximum Contact Load	60Vdc / 2A 50Vac / 2A
Internal Voltage 4-20mA	19V ± 1V
Fuse	Fuse T 1A (blow value 35A)
Operating Temperature:	-20°C to + 50°C
Operating Humidity:	0 – 100 RH% (condensing)
Storage Temperature	-20°C to +60 °C
Ingress Protection	Main Unit: IP65 Sensor Head: IP65
PID Sensor	MiniPID II 1G Ex ia IIC Baseefa 07ATEX0060U
Measuring Range	0 to 10ppm, 0 to 50ppm, 0 to 1,000ppm, 0 to 3,000ppm. Falco$^{TAC.}$ 0 to 50ppm
T_{90}	< 10 seconds
Accuracy	+/- 5% +/- 1 digit
Display Screen	OLED 64x128 pixels
WEEE Compliant	Compliant with the European Waste Electrical and Electronic Equipment directive
Certification	II 2G Ex db ib IIC T4 Gb Class 1, Div 1 Groups ABCD T4

All specifications quoted are at calibration point and under the same ambient conditions. Specifications are based on isobutylene calibration at 20 °C and 1000 mBar.

Un-Packing

All equipment shipped by Ion Science Ltd is packed in containers with shock absorbing filling to protect them against physical damage.

Remove the contents carefully and check them against the packing list. Report discrepancies between the contents and the packing list to Ion Science Ltd. Ion Science will not be responsible for discrepancies not reported within ten days of your receipt of the shipment.

Every FALCO (new units and those returned from a Service Centre) must have a Certificate of Calibration before you install it.

System Description

Outputs and Communications

FALCO has six communication outputs:

- The on-board LCD and LEDs on the faceplate.
- 4 - 20 mA Current Loop.
- RS485 Modbus.
- Two programmable relays.

Real-time information is displayed on the LCD and transmitted on the 4 - 20 mA and RS485 channels.

You can program two alarms to operate at a chosen concentration of gas. The alarms will display a message on the LEDs, energise the relays, and transmit a signal on the 4 - 20 mA channel.

The alarms and relays are individually programmable to the settings required by the site policy. You can choose either alarm to energise either relay.

Both relays can be programmed to switch 60 VDC / 2 A or 50 VAC / 2 A maximum load.

RS485 Modbus Interface

The FALCO Modbus interface uses Modbus RTU

- 9600 baud, 8 data bits, no parity, 1 stop bit.

Register Address	Name	Function Code	Data Type	Range	Register Qty
102	Gas concentration	3 - Read Holding Registers	32-bit Float	±1.175494E-38 to ±3.402823E+38	2
106	Sensor Voltage(mV)	3 - Read Holding Registers	32-bit Float	±1.175494E-38 to ±3.402823E+38	2

108	Temperature (°C)	3 - Read Holding Registers	16-bit Signed Integer	-32768 to +32767	1
182	LED Brightness	3 - Read Holding Registers	16-bit unsigned Integer	0 to 100	1
1003	Hardware Version	3 - Read Holding Registers	16-bit unsigned Integer	1 to 255 (Default value 1)	1
1005	Measurement Unit	3 - Read Holding Registers	Character	'p' or 'g' (Default value 'p')	1
1010	Response Factor	3 - Read Holding Registers	32-bit Float	0.1 - 10.00	2
1012	Sensor Range	3 - Read Holding Registers	16-bit unsigned Integer	10, 50, 1000, 3000 (Default value 3000) Falco^{TAC} 50 (Default value 50)	1
1060	Cal 100	3 - Read Holding Registers	16-bit unsigned Integer	0 to 65535 (Default value 500)	1
1061	Cal3000	3 - Read Holding Registers	16-bit unsigned Integer	0 to 65535 (Default value 3000)	1

Installation Requirements

Please make sure you understand all the installation requirements and have read the technical specification before you install FALCO.

Location Requirements

There are many variables involved in defining the optimum location for a gas detector.

Mount the FALCO:

- in a location where it is most likely to detect the gas.
- in an area that has good air circulation. Restricting natural air current can result in delayed detection.
- on a solid, stable support, where it is accessible for servicing.
- in a vertical position, with the sensor at the bottom to help avoid rain and dust entering the sensor chamber.
- not in direct sunlight or over a heat source (this can cause the Falco to exceed its certified internal working temperature of 50 °C).
- not in areas likely to flood.
- In a location that has easy access for servicing.

For further guidance please consult the relevant local standards or local occupational health representatives.

INFORMATION

- If the VOCs being detected are known to be lighter than air install the FALCO unit as high on the wall as is practical.
- If the VOCs being detected are known to be heavier than air, install the FALCO unit as low as possible but never on the floor.

Power Requirements

Nominal Voltage:	12 V to 40 Vdc

Cable and Gland Requirements

We recommend you use screened cables e.g., multicore cable with SWA armour, or Braid Armour to protect against EMI.

The manufacture and build of the cable glands is the responsibility of the installer. The cable glands must conform to the certification standards required for the installation site. Install blanking plugs with the appropriate certification standards to unused cable gland ports.

NOTE: The external terminal is to be used to ground / earth the Falco instrument. The connecting wire must be a minimum of 4mm2.

Installation

INFORMATION

Before installing the FALCO unit thoroughly read the technical specification contained in this User Manual

Preparation for Installation

Before you install the FALCO, refer to the:

- Instrument User Manual
- Location Requirements
- Power Requirements
- Cable and Gland Requirements
- Dimensions for Installation
- RS485 Interface Requirements

Dimensions for Installation

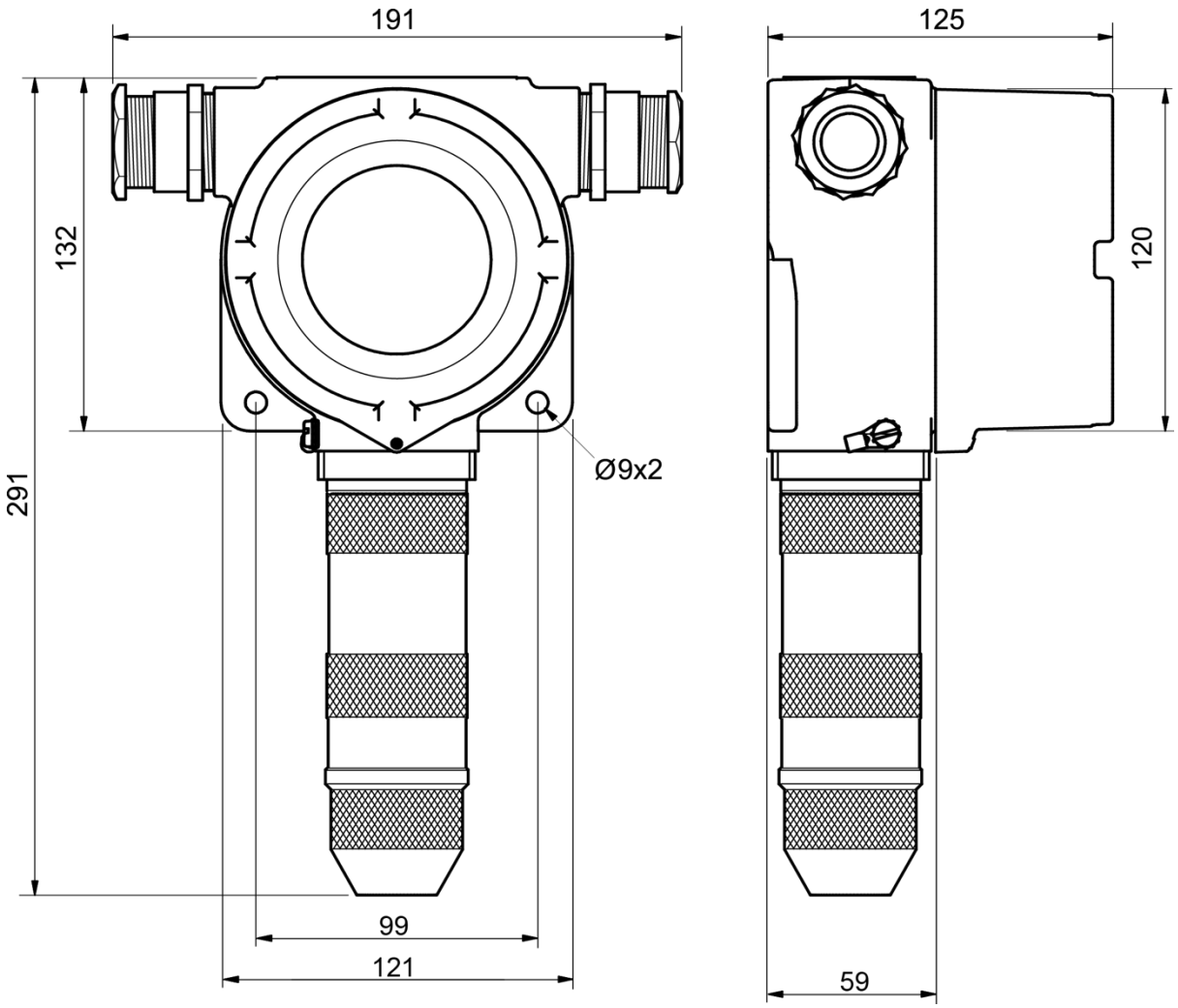

To Install the Housing Module

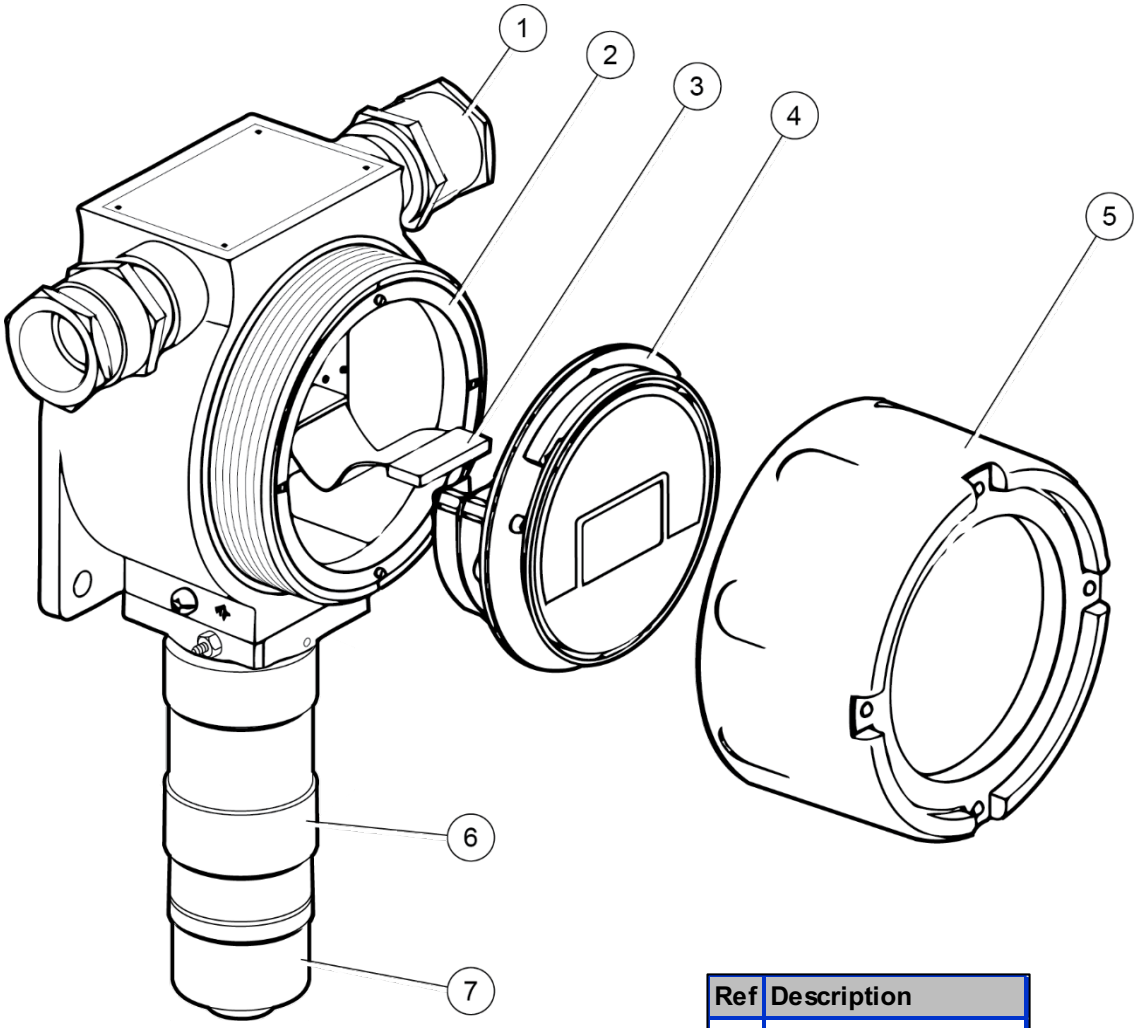

Ref	Description
1	ExD Cable Gland
2	ExD Housing Module
3	Ribbon Cable
4	Control Module
5	Front Cover
6	Pump Housing Cover
7	PID Housing Cover

To install the FALCO as a complete assembly

1. Use two M8 screws to install the FALCO as a complete unit (Main Unit and Sensor Housing together) on a solid, stable support.
2. After you install the FALCO, unscrew and remove the Front Cover. Unbolt the three bolts holding the control module (4) from the ExD Housing Module (2). Disconnect the Control Module from its Ribbon Connector to get access to the terminal blocks.
3. Feed the cables through the glands (1) and make the connections to the terminal blocks as you require. Refer to Configurations of the current loop, on the following pages.
4. Seal the cables in the cable glands.

5. Reconnect the Control Module to the Ribbon Connector and place into position. Replace and tighten the three retaining bolts.
6. Screw the Front Cover back on.
7. Connect and switch on the power supply.
8. Do an After-Installation Test.
9. Calibrate the instrument.

After-Installation Test

Do a test of the relay and the 4 – 20 mA systems to check for correct installation and function.

Do a "Bump Test" to verify that the sensors respond correctly to the test gas at the concentrations programmed for Set Points 1 and 2.

A “Bump Test” does not calibrate the sensors. If the instrument does not display the gas concentration given by the bottle, do a calibration to give the correct readings.

Installation in Zones with Explosive Atmospheres

The wiring diagram for the Falco is shown below, that covers in input power, MODBUS and Current Loop. There are four possible configurations for the 4 – 20 mA current loop depending on the installation site that are following section.

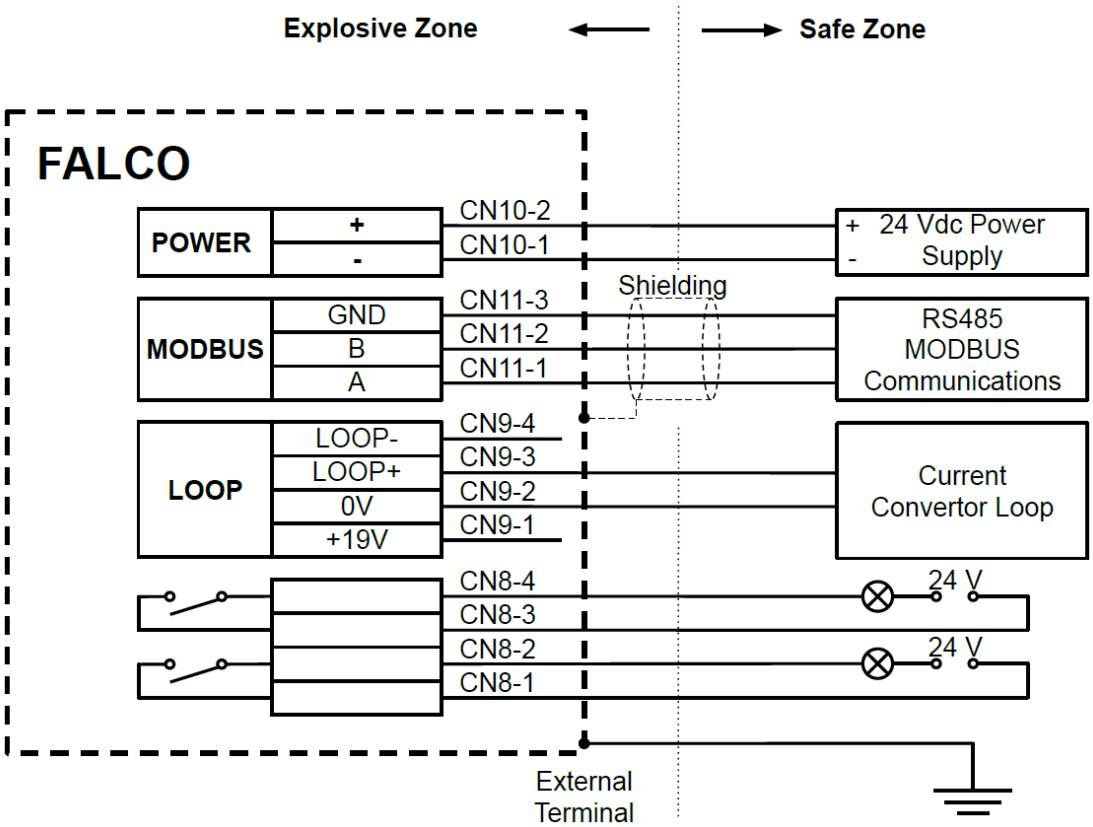

Figure showing typical connector wiring diagram.

Example method of connection for explosive environment

Configurations of the 4 – 20 mA Current Loop

The Falco has internal power supply and current source. Depending on the installation site requirements there are several possible configurations, see the following block diagrams and DIP switch settings to suit the application. All configurations are galvanically isolated from the 8 – 40 Vdc power supply used to power the Falco instrument.

This DIP switch can be found near the ribbon cable and is labelled 4 - 20mA LOOP.

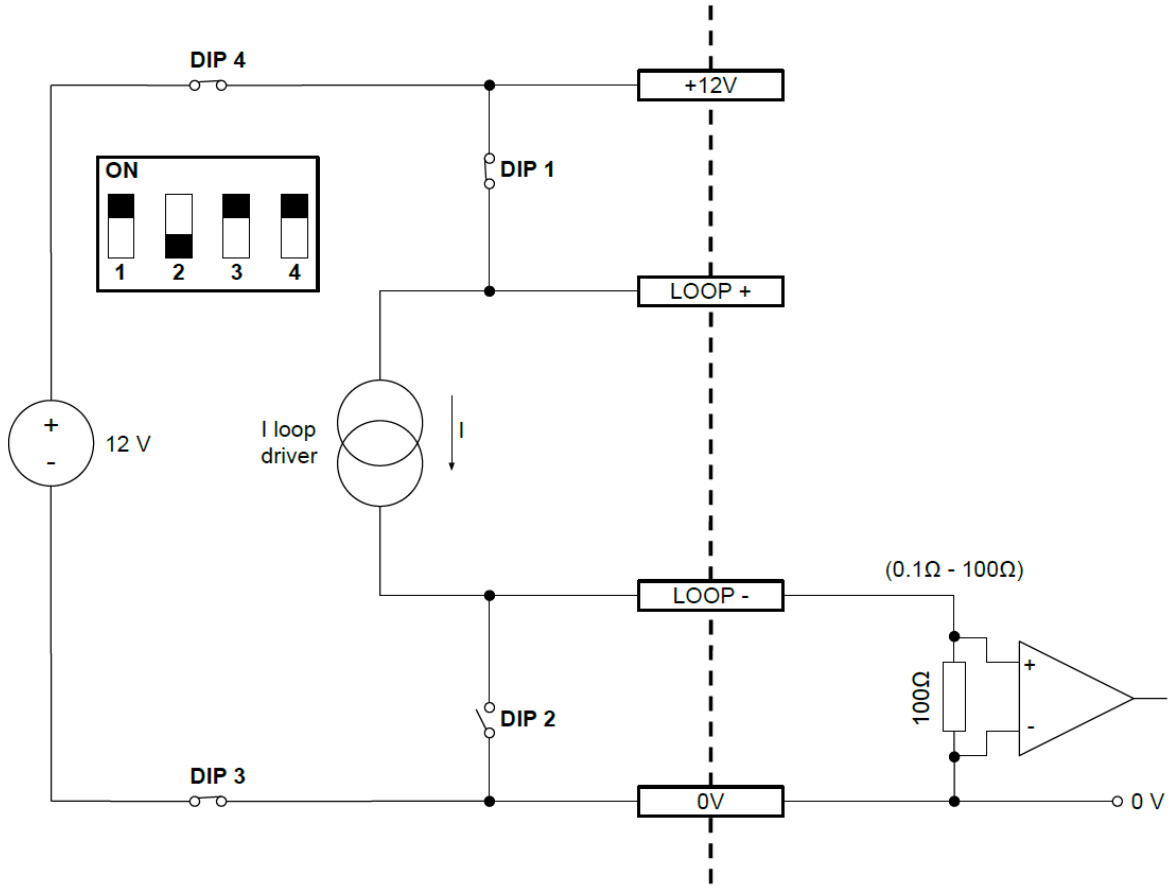

Falco Current Loop Configuration 1 – active current loop, using internal power supply connected to the current source.

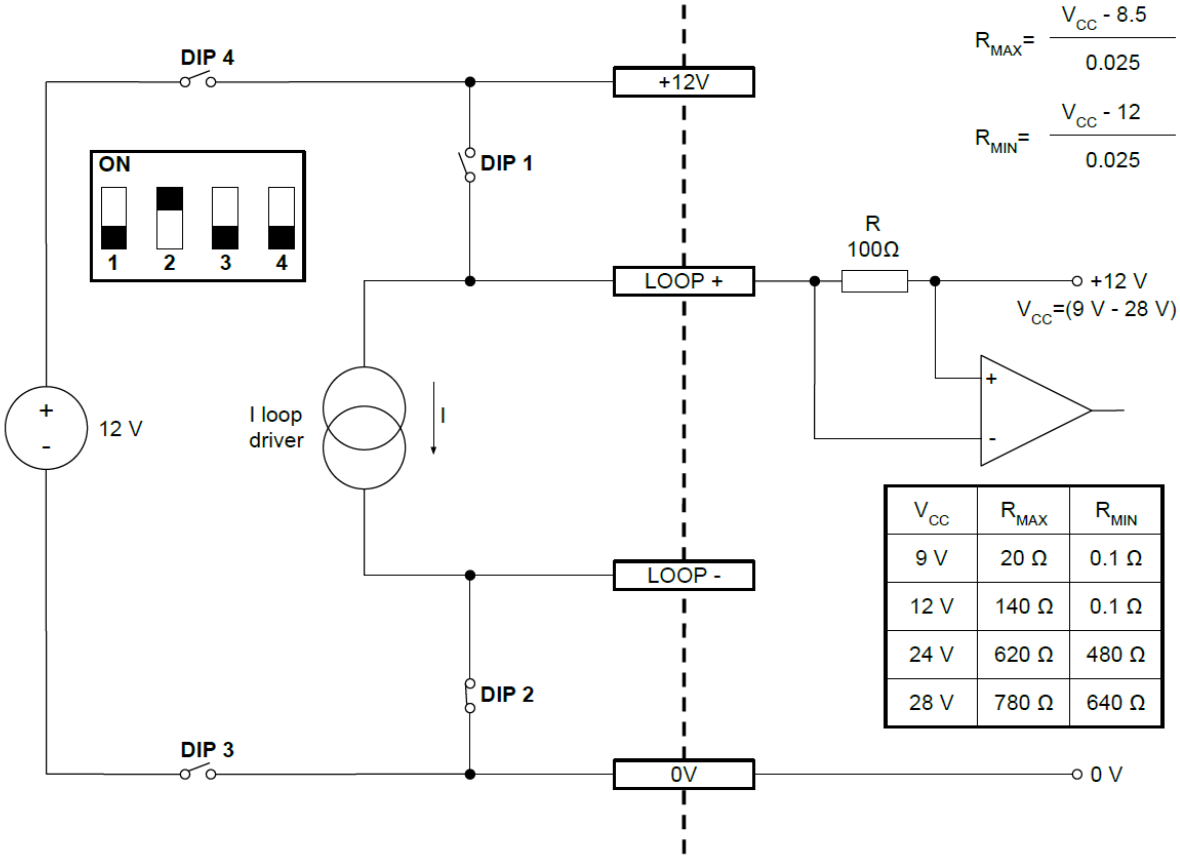

V_{CC}	R_{MAX}	R_{MIN}
9 V	20 Ω	0.1 Ω
12 V	140 Ω	0.1 Ω
24 V	620 Ω	480 Ω
28 V	780 Ω	640 Ω

Falco Current Loop configuration 2 – passive current loop, externally powered current source.

When using this configuration ensure that the current loop circuit has voltage is between 8.5 V and 12 V, at Loop + after the resistances of the line have been taken into consideration.

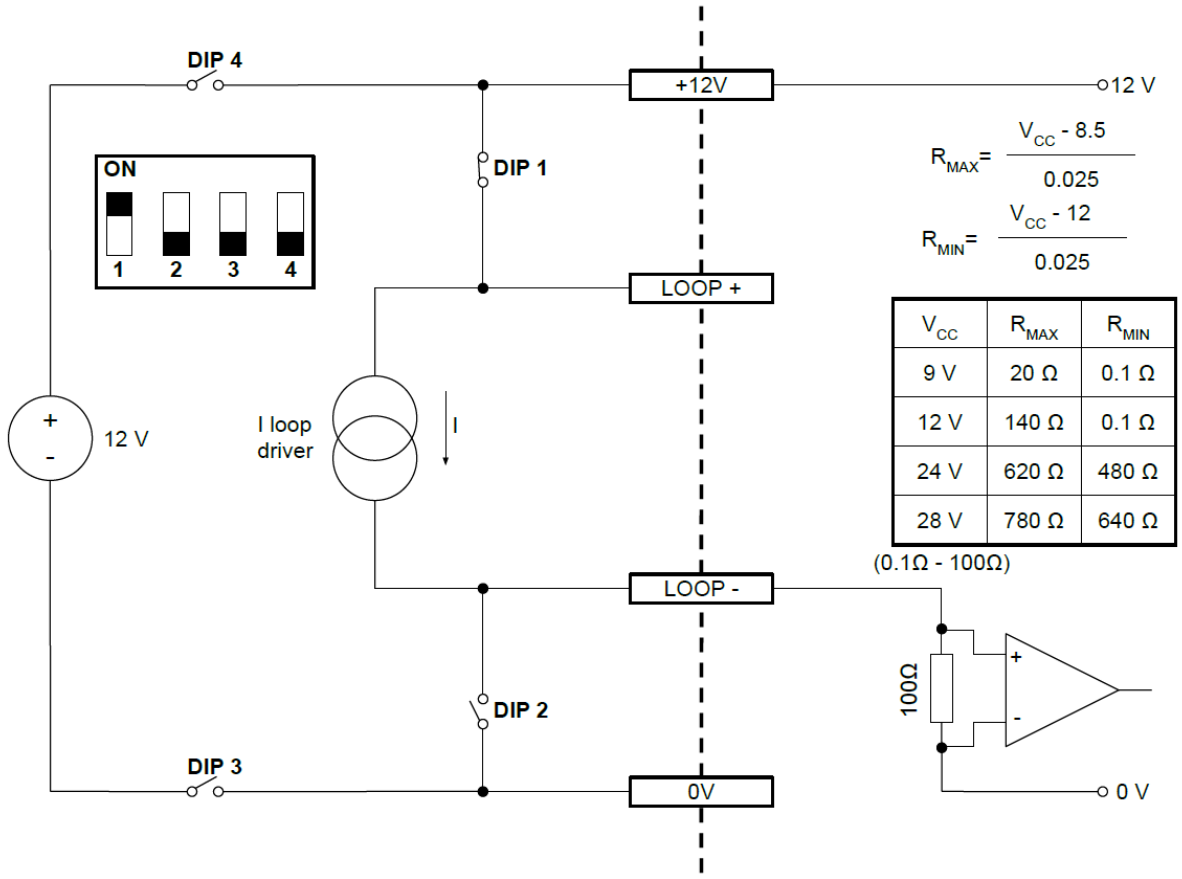

Falco Current Loop Configuration 3 – passive current loop, externally powered current source

When using this configuration ensure that the current loop circuit has voltage is between 8.5 V and 12 V, at Loop + after the resistances of the line have been taken into consideration.

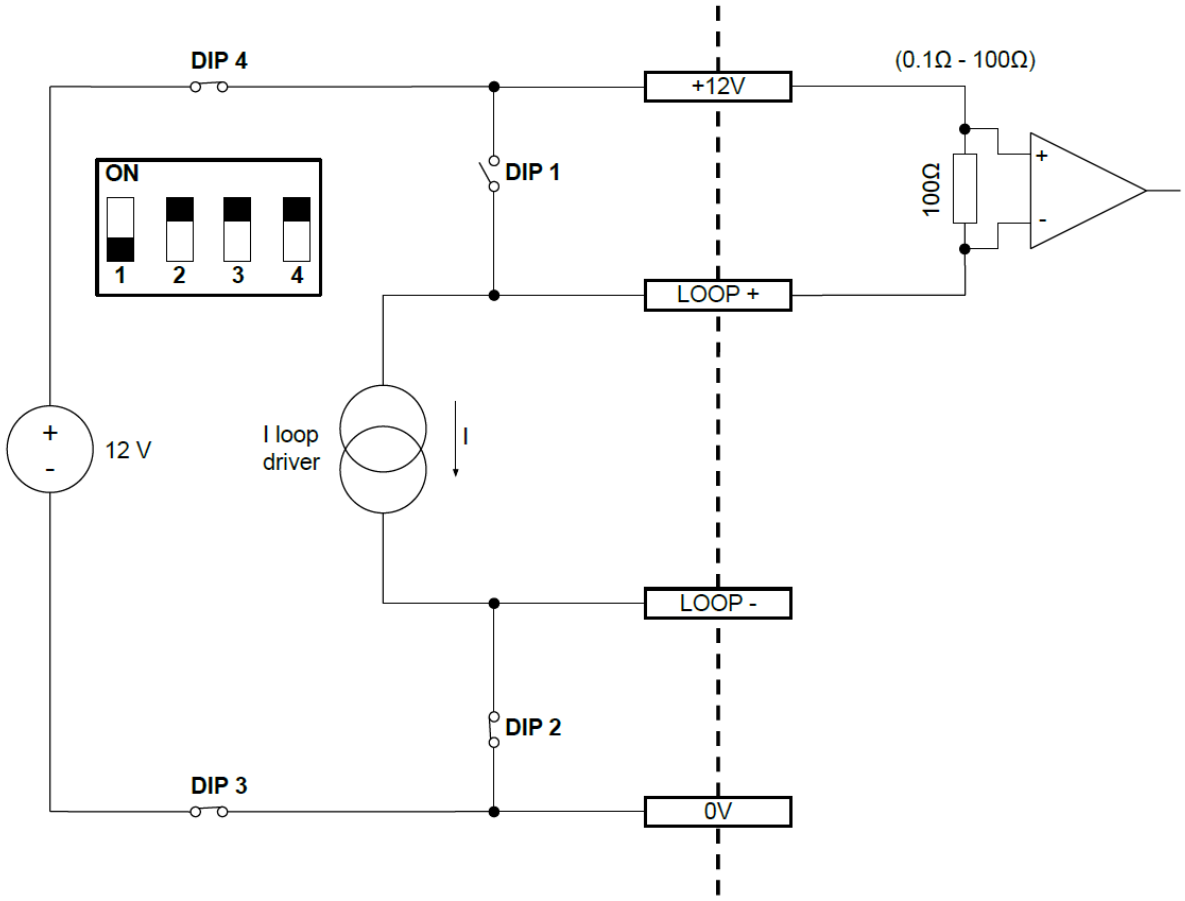

Falco Current Loop Configuration 4 – active current loop, using internal power supply connected to the current source.

Hydrophobic Filter

It is very important to prevent the ingress of water and moisture into the Falco as this can cause damage to the PID sensor and electronic circuits. Please ensure that before running Falco you have attached a hydrophobic filter to the instrument. The Luer is factory fitted to the Falco. The hydrophobic filter is then attached to the Luer, please ensure the hydrophobic filter is fitted to the Luer the correct way round (see image below). The hydrophobic filter must always be fitted and will need to be replaced on a periodic basis.

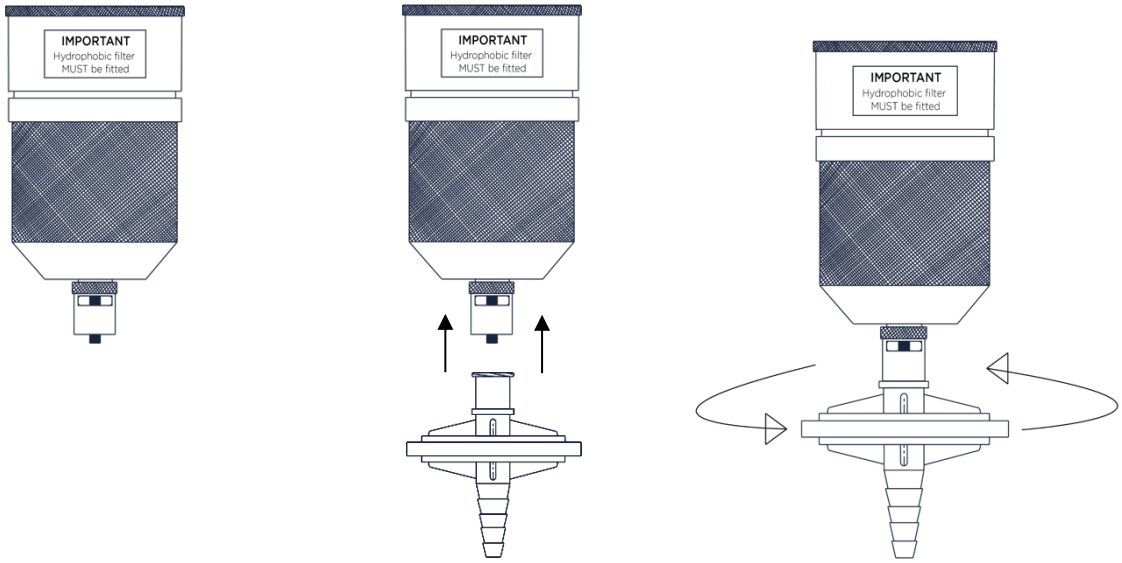

Sampling Tube Length

The maximum recommended sample tube length is 20m (4x2mm tube).

Sample tubing should be made of stainless steel or fluorinated material e.g., PTFE, PVDF. This prevents VOC's "Sticking" to the inside walls of the tubing and causing false readings.

Removal of the Control Module

The removal of the Control Module will only be necessary if the module is no longer required in its detecting position or if there is a module malfunction. The FALCO has an externally located intrinsically safe sensor, allowing for quick and easy servicing without the need for a hot work permit. Dual certification allows the FALCO to be serviced and calibrated in a hazardous environment without having to remove the power.

To Remove the Control Module

CAUTION: This area must be known to be free of flammable concentrations prior opening the enclosure

To remove the FALCO as a complete assembly:

1. Switch off and isolate the power to the FALCO.
2. Unscrew and remove the Front Cover.
3. Unbolt the three retaining bolts on the Control Module.
4. Disconnect the Control Module from the Ribbon Connector and remove it.
5. Unseal the cables in the cable glands.

6. Disconnect the cables from the terminal blocks and withdraw them from the Housing Module via the cable glands.
7. Make sure that all the electrical connection is either removed or left in a safe, isolated condition.

Operating the FALCO

User Interface

The FALCO front face has:

- OLED display,
- Keypad - 5 magnetic keys,
- Status Light

Keypad

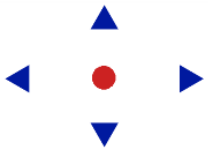

For easy menu navigation the keypad consists of five magnetic keys **Up**, **Down**, **Left**, **Right** and **Enter**.

Up and **Down**	▲ ▼	Moves the cursor (indicating which screen option is currently selected) and adjusts numeric values and settings up and down.
Left and **Right**	◀ ▶	Moves the cursor left and right and steps between menu screens.
	◀	Left is also used to “escape” settings screens (e.g. exit a menu or sub-menu).
Enter	●	Used to enter features (e.g. settings screens) and to confirm specified settings.

INFORMATION

The Enter ● key, and the Left ◀ key when being used to escape, must be pressed and held briefly to operate them.

The other keys, and the Left key when not been used for escape only need to be tapped.

Status Light

Yellow	Displayed during start-up only, when power is first applied.
Green	Indicates that FALCO is operating correctly. Also displayed during the start-up routine.
Amber	Flashing amber indicates Alarm 1 has been triggered i.e. the measured level of VOC is above the alarm threshold. Also displayed during the start-up routine.

Red	Flashing red indicates Alarm 2 has been triggered, i.e. the measured level of VOC is above the alarm threshold. Also displayed during the start-up routine.

INFORMATION

The % brightness of the LEDs during normal operation and when alarms are being triggered is configurable.

There are separate settings for both conditions.

Start-Up Routine

When power is applied, the Status Light goes yellow.

The FALCO will then display the following screens, in this order:

Logo Screen



After the power is turned on, the FALCO displays the 'Ion Science' logo for 3 seconds and the status light is green.

Info screen 1

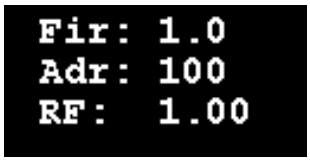

Info screen 1 then appears for 3 seconds. It displays the following:

- Fir - Firmware version
- Adr - Modbus address
- RF - Response factor

The status light goes amber.

Info screen 2



The Info screen 2 then appears for 3 seconds showing the measurement range. The status light goes red.

Warm up



The warm up screen then appears and the screen shows the 30 minute countdown. The status light goes green.

INFORMATION

After switch-on the instrument should be allowed to acclimatise for 30 minutes before working in its 'Normal running mode'.

The warm-up time can be skipped by pressing the **Enter** key.

Normal Running Mode Screen



The screen then appears continuously and shows the PID reading and units. The Status Light colour depends on the status.

INFORMATION

The hour glass symbol will appear on the screen for the remaining 'warm-up' time if it has been skipped. The brightness of the display will also slowly pulsate to indicate that the warm up period has been skipped.

Software Screens

There are eight menus: **i1**, **i2**, **i3**, **i4**, **i5**, **i6**, **i7 and i8**

Software Flow Chart

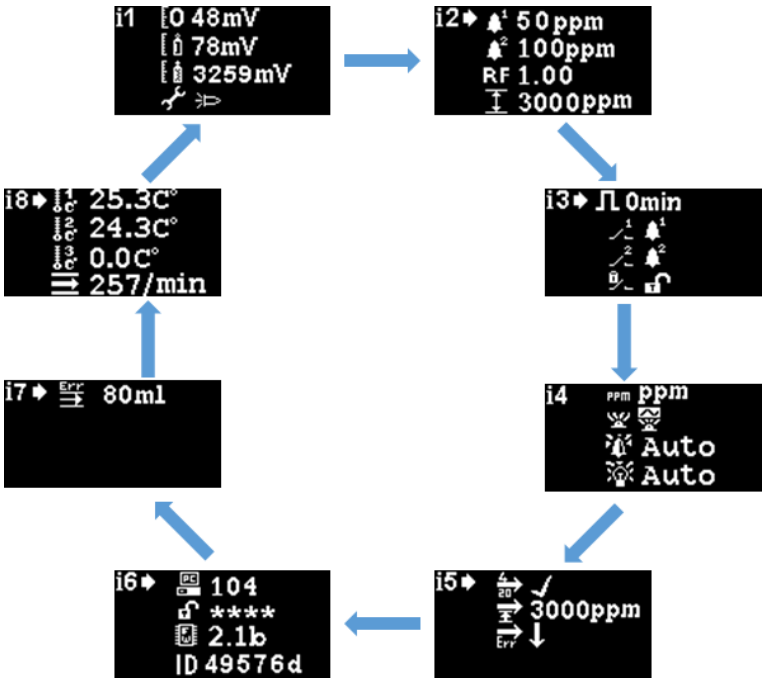

To access the settings menus, press the **Right** ▶ key from the Normal Running Mode screen. If a passcode has been set, the Lock screen will be displayed. Otherwise, the **i1** menu will be displayed.

Lock Screen



The Lock screen is displayed if a password number has been specified (see menu **i6**). It protects the instrument from unauthorised adjustment - the menus (see below), cannot be accessed until the correct number has been entered.

Press the **Enter** ● key. A cursor is then displayed under the first asterisk. Press the **Up** ▲ or **Down** ▼ key. The asterisk will be replaced by a number. Keep pressing the up and down keys until the first digit of the passcode is displayed.

Press the **Right** ▶ key to move to the next asterisk. Repeat the above procedure to enter the next digit. Repeat until the four digits of the password are entered.

Press the **Enter** ● key. If the correct password was entered, the **i1** menu will be displayed.

If not, the LED status indicator will change to red. The Lock screen remains displayed, and the user can attempt to enter the password again.

INFORMATION

Entering 4321 at the Lock screen will always enable access to the menus. This can be used if, for example, the actual password has been forgotten.

Navigating the Menus and Selecting Menu Options

The six screens are navigated through using the left and right ◀ ▶ keys on the magnetic keypad. For example, if the **i2** menu is being displayed, press the left key to display the **i1** menu and the right key to display the **i3** menu.

Each of the menu screens has two or more options on it.

To activate the menus, press the **Enter** ● key. A cursor is then displayed next to the first option in the current menu.

To select a menu option, use the **Up** ▲ and **Down** ▼ keys to move the cursor to the required option. To enter the required option, press the **Enter** ● key.

See below for details of all the menus, sub-menus and options.

INFORMATION

If no action is taken in the menu screens for 120 seconds, the display will automatically revert to the Normal Running Mode screen. If a passcode has been set, this must again be entered to access the menus.

Menu i1



This menu displays following options, along with their current settings:

Zero: Used to set the Zero gas calibration level. The currently set level (in mV) is displayed.

Span 1: Used to set the Span 1 gas calibration level. The currently set level (in mV) is displayed.

Span 2: Used to set the Span 2 gas calibration level. The currently set level (in mV) is displayed.

Service / Test mode: Used to switch to the MiniPID sensor in and out of servicing mode. When service mode is selected the power to the MiniPID is turned off. The current setting is indicated by a symbol. indicates the MiniPID is off, indicates the MiniPID is on. From here you can also put the Falco into test mode. This means the Falco will simulate its output behaviours. To configure the Falco to display a fixed output level, select . To set the Falco to output a sawtooth wave, select .

Menu i2



Alarm level 1: Used to set the ppm level at which Alarm 1 is triggered. The current level is displayed.

Alarm level 2: Used to set the ppm level at which Alarm 2 is triggered. The current level is displayed.

Measurement range: Used to view the detection range of the instrument.

Response factor: Used to set the response factor appropriate for the gas to be detected. The current factor is displayed.

Menu i3



Measurement Cycle: This allows you to change the time between updating outputs.

Relay 1 output: The instrument has two relay outputs, both of which can be triggered by a condition selected by the user. The condition that triggers Relay 1 is selected via the **Relay 1 output** option. A symbol representing the currently selected trigger condition is displayed (see the Relay section for more information).

Relay 2 output: See above.

Relay Latching: Configures the relays between latching or non-latching

Menu i4



Detection units: Used to change the detection units from the default of ppm to mg/m^3. The current units are displayed.

PID status light mode: Used to switch the status light between steady illumination and slow pulsing when alarming. The current setting is indicated by a symbol.

Alarm brightness: Used to set the brightness of the status light during alarm conditions.

Status Light brightness: Used to set the brightness of the status light during normal operation.

Menu i5



4-20 mA Enable/Disable: Used to set the 4 mA to 20 mA output to be active or inactive, as indicated by a tick or a cross.

20 mA range: Used to set the 20 mA range of the instrument.

4 - 20 mA fault level: Used to set whether the fault signal is <4 mA or > 20mA.

Menu i6



Modbus address – Used to select a Modbus slave address.

Password lock – Used to set the password lock on and off, and to change the password number.

The symbol for this option indicates whether the lock is on or off .

Firmware version – Displays the current firmware version of the instrument.

UID – Microcontroller unique ID.

Menu i7



Flow Error Setpoint - The flow level (in ml/min), below which, the unit will raise an error.

Note: Do not change blow 80 ml.

Menu i8



Flow Sensor – Temperature of internal flow sensor system.

Pump Operation

The pump will operate automatically and does not need to be configured by the user.

The Falco has a built-in flow measurement system that governs the pump flow rate. In order to establish an accurate flow rate, the pump will briefly stop every 30 seconds so that the flow measurement system can establish an accurate baseline, this is called the flow measurement cycle.

If the flow measurement system detects that the flow rate is less than 80 ml/min the instrument will display Error code 4 (Low System Flow). If the error persists for more than 3 flow measurement cycles, the instrument will display Error code 6 (Flow System Blocked).

Calibration

The calibration options are accessed from Menu i1

INFORMATION

0 – 10 and 0 – 50 ppm Falco require 2 point calibration (Zero and Span 1). 0 – 1000 and 0 – 3000 ppm Falco require 3 point calibration (Zero, Span 1 and Span 2).

For best performance, it is recommended to use a gas concentration near your alarm point. Before starting the calibration process, please ensure you have the following equipment ready for use.

- Magnetic Actuator (part no. 873202)
- Hydrophobic Filter (part no. A-873273)
- Zero air
- Span gas
- Demand Flow Regulator (part no. 5/RD-01)
- Suitable tubing to connect gases to Falco

Zero

1) Local ambient air can be used for zeroing as long as it can be confirmed there are no target or interferences gases present in concentrations exceed the lower detection limit of the Falco. If this

cannot be confirmed zero air should be used. If using a cylinder attach the tubing between the Falco and the gas regulator.

2) Enter zero cal mode by moving the cursor to the zero cal icon and then press the **Enter** key. The zero cal screen is described below:



The top value is the live ppm reading from the Falco (based on previous calibration)

The bottom number indicates this is the zero cal screen

1) The live reading will move towards zero as the sensor housing is purged. After 2 minutes press the **Enter** key to set the zero level.

   The Status Light will then blink briefly to confirm the setting has been made. The top reading will then change to 0.0ppm.

2) Remove the Zero air

3) Press the button to exit zero mode.

NOTE: The cursor cannot be moved from next to the "set" symbol . The only function the user can carry out is to press the Enter key to set the zero level to the current ppm reading.

Span 1

Span 1 is used to calibrate Span 1 of the Falco.

1) Attach the span gas cylinder to the Falco.

2) Enter Span 1 mode by moving the cursor to the Span 1 icon and then press the **Enter** key. The Span 1 screen is described below:



The top value is the live ppm reading from the Falco (based on previous calibration)

The lower value is the span 1 concentration (100.7ppm in this example).

3) If the Span 1 concentration is not the same as the calibration gas concentration it must be changed.

   To change the Span 1 concentration, move the cursor to the lower value and press the **Enter** key. A new screen with that value is then displayed.

   Change this value to match the level specified on the calibration gas bottle as follows. A cursor is displayed under the first digit of the value. Press the **Up** or **Down** key to change it.

   Press the **Right** key to move to the next digit. Repeat the above procedure to change it as required.

Press the **Enter** key to return to the previous screen (above). Then move the cursor to the "set" symbol and apply the gas to the PID sensor. After 2 minutes press the **Enter** key. The status light will 'blink' briefly to confirm the setting has been changed.

4) Remove the span gas cylinder.

5) Press the button to exit span 1 mode.

Span 2

Span 2 is used to calibrate span 2 of the Falco.

1) Attach the span gas cylinder to the Falco.

2) Enter span 2 mode by moving the cursor to the span 2 icon and then press the **Enter** key**.** The span 2 screen is described below:



The top value is the live ppm reading from the Falco (based on previous calibration)

The lower value is the span 2 concentration (1000 ppm in this example).

3) If the span 2 concentration is not the same as the calibration gas concentration it must be changed.

To change the span 2 concentration, move the cursor to the lower value and press the **Enter** key. A new screen with that value is then displayed.

Change this value to match the level specified on the calibration gas bottle as follows. A cursor is displayed under the first digit of the value. Press the **Up** or **Down** key to change it.

Press the **Right** key to move to the next digit. Repeat the above procedure to change it as required.

Press the **Enter** key to return to the previous screen (above). Then move the cursor to the "set" symbol and apply the gas to the PID sensor. After 2 minutes press the **Enter** key. The status light will 'blink' briefly to confirm the setting has been changed.

4) Remove the span gas cylinder.

5) Press the button to exit Span 2 mode.

RF (Response Factor)

Response factor adjustment is accessed from Menu i2

PIDs are typically calibrated with isobutylene. However, not all VOC have the same response. The difference in response can be accounted for by multiplying the reading by the VOC's response factor. If a response factor is applied the concentration displayed on the Falco will represent the concentration of the VOC.

For example, if the RF is 00.50, and 100ppm is detected based on an isobutylene calibration:

100 ppm x 00.50 = 50 ppm is the value displayed

The default setting for the response factor is 1.

To set a response factor move the cursor to the response factor icon RF and press the **Enter** key.

A cursor is displayed under the first digit of the value. Press the **Up** ▲ or **Down** ▼ key to change it.



Set the response factor by moving the cursor and changing the values.

If a factor of higher than 10.00 is entered, when the **Enter** key is pressed, the factor will revert to the default (01.00ppm) and the screen will not exit.

The Modbus will output the calculated value. The 4 - 20 mA output will not.

The factor can be adjusted from 0.100 to 10.00 in 0.01 increments.

Detection Units PPM

The detection unit options are accessed from Menu i2

Move the cursor to the required units. Press the **Enter** key to save the setting change and return to the **i4** menu. The status light will then blink briefly to confirm the setting has been made.

Press the **Esc** ◀ key to return to the **i4** menu without saving the change to the setting.



Used to change the detection units from the default of ppm to milligrams per meter cubed (mg/m^3).

The default units are ‘ppm’and there is an option to display the readings in milligrams per meter cubed (mg/m^3). To display the reading in mg/m^3 requires a barometric pressure and temperature value. The instrument assumes the fixed values shown below.

Barometric pressure:	1000 mBar
Temperature:	20 °C

Measurement Cycle

Measurement cycle is accessed from menu i3.



The measurement cycle can be set from continous to 10 minutes with 1 minute increments

The default setting is 00 minutes, meaning that the display will update in real-time. This setting is adjustable in 1-minute increments:

00 mins = PID is illuminated permanently. Outputs updated 1/second.

01 mins = PID is illuminated permanently. Outputs updated 1/minute.

02 mins = PID is illuminated permanently. Outputs updated 2/minute.

03 mins = PID is illuminated permanently. Outputs updated 3/minute.

…and so on for the 04 mins to 10 mins settings.

Alarms

The alarm levels are set in menu i2

The Falco has 2 alarms levels, 1 and 2. When alarm level 1 is reached the status bar will go amber and Alarm 2 is reached the status bar will go red.

Alarm 1



Used to set the ppm level at which Alarm 1 (amber) is triggered. When accessed, the screen displays the current level.

Set the level as follows. A cursor is displayed under the first digit of the alarm level. Press the **Up** or **Down** key to change it.

Press the **Right** key to move to the next digit. Repeat the above procedure to change it as required. Repeat until the required value has been entered.

Press the **Enter** key to save the setting change and return to the **i2** menu. The status light will then blink briefly to confirm the setting has been made.

Note that the instrument will not allow the Alarm 1 level to be set above the Alarm 2 level.

Press the **Esc** key to return to the **i2** menu without saving the change to the setting.

Alarm 2



Used to set the ppm level at which Alarm 2 (red) is triggered. When accessed, the screen displays the current level.

Set the Alarm 2 level in the same way as described for Alarm 1 above.

Note that the instrument will not allow the Alarm 2 level to be set below the Alarm 1 level.

Alarm 1 will be superseded by the Alarm 2, i.e. if the level of organic compound detected exceeds the Alarm 2 level, that alarm will be triggered instead of Alarm 1 (even though the level will be above the Alarm 1 threshold as well).

Alarm Brightness

Alarm brightness is accessed from menu i4



Used to set the brightness of the Status Light during alarm conditions, from 0 to 100%, or to AUTO mode.

Change the percentage brightness as required.

Alarm brightness may also be set to AUTO mode. Auto mode will measure the ambient light on the face of the instrument and adjust the brightness of the LED's. The LED's will become brighter if the instrument is in high LUX conditions (bright sunshine) and dimmer during low LUX conditions.

While in the screen, the Status Light will change to red and will change brightness in response to change to brightness percentage.

If a brightness of higher than 100% is entered, when the **Enter** ● key is pressed, the factor will revert to the default (100%) and the screen will not exit

Alarm Pulsing

Measurement cycle is accessed from menu i3



Used to switch the LED display between steady illumination and slow pulsing

To change the setting, press the **Up** ▲ or **Down** ▼ key to change the setting. The symbol will change as appropriate:



Steady illumination.



Slow pulsing.

Press the **Enter** ● key to save the setting change and return to the **i3** menu.

Press the **Esc** ◀ key to return to the **i3** menu without saving the change to the setting.

Relays

Relay options are accessed from menu i3

Relay 1 Options



Used to specify which of 4 conditions will trigger the Relay 1 output. Each is represented by a symbol, as described below.

The following conditions may be selected from:

	Activate when Alarm 1 is exceeded.
	Activate when Alarm 2 is exceeded.
	Activate when a fault condition is raised.
	Activate for 1 second after the output is updated.

To change the setting, press the **Up** ▲ or **Down** ▼ key to browse through the 4 settings. The symbol will change as appropriate.

Press the **Enter** ● key to save the setting change and return to the **i3** menu.

Press the **Esc** ◀ key to return to the **i3** menu without saving the change to the setting.

Relay 2 Options



Used to specify which of 4 conditions will trigger the Relay 2 output.

See the description of the Relay 1 options setting for details.

4 – 20 mA

4 – 20 mA options are accessed from menu i5

4 – 20 mA Enable/Disable



Used to turn the 4 mA to 20 mA output on and off.

To change the setting, press the **Up** ▲ or **Down** ▼ key to switch between on (tick symbol), and off (cross symbol).

Press the **Enter** ● key to save the setting change and return to the **i5** menu.

Press the **Esc** ◀ key to return to the **i5** menu without saving the change to the setting.

4 - 20mA Range



The lower limit of the 4 mA to 20 mA output range, mapped to 4 mA, is 0 ppm. This option is used to set the upper limit, mapped to 20 mA.

Change the value as required.

Modbus Address

Modbus address setting is accessed from menu i5



Used to select a Modbus slave address.

Change the address number as required, from 1 to 247. The instrument default is address 100.

A unique slave address must be assigned for each Modbus slave device on your network.

Status Light Brightness

The Status Light brightness is accessed in menu i4



Used to set the brightness of the Status Light during normal operation, from 0 to 100%, or to AUTO mode.

Change the percentage brightness as required.

Status light brightness may also be set to AUTO mode. Auto mode will measure the ambient light on the face of the instrument and adjust the brightness of the LED's. The LED's will become brighter if the instrument is in high LUX conditions (bright sunshine) and dimmer during low LUX conditions. .

While in the screen, the Status Light will change to green (if it wasn't already) and change brightness in response to change to brightness percentage.

If a brightness of higher than 100% is entered, when the **Enter** key is pressed, the factor will revert to the default (100%) and the screen will not exit.

Service Mode

Service mode is accessed from menu i1



Used to turn the service mode on and off.

The power supplied to the MiniPID sensor is not dangerous to the user by either the risk of electrocution or cause a threat of an explosion in a hazardous environment.

It is however good practice to remove local power to circuitry when servicing to avoid possible damage by short circuit.

A service mode setting that removes local power is therefore available and can be switched to and from using this screen.

The lamp symbol on the screen indicates whether or not the sensor service mode is on or off.

If the sensor is in normal mode is displayed.

If the sensor is in servicing mode is displayed.

If the instrument is in fixed output test mode is displayed.

If the instrument is in oscillating output test mode is displayed.

To change the setting, press the **Up** ▲ or **Down** ▼ key. The symbol will change as appropriate. Press the **Up** ▲ or **Down** ▼ key again to reverse the setting.

Press the **Enter** ● key to save the setting change and return to the **i1** menu.

Press the **Esc** ◀ key to return to the **i1** menu without saving the change to the setting.

See below for how to change these settings.

INFORMATION

Alarm levels can be used to trigger relay 1 or relay 2 (see relay section below).

Password Lock



Used to set the password lock on and off, and to change the password number.

The current password number will be displayed on the screen. The default value is 0000, which sets the lock to “off”.

Change the password number as required. Use the same method for changing numbers as described previously for the Alarm1 setting.

Changing the number to any number apart from 0000 will set the lock to “on”, with that number as the required password.

Change the password number back to 0000 to turn the lock off again.

Servicing

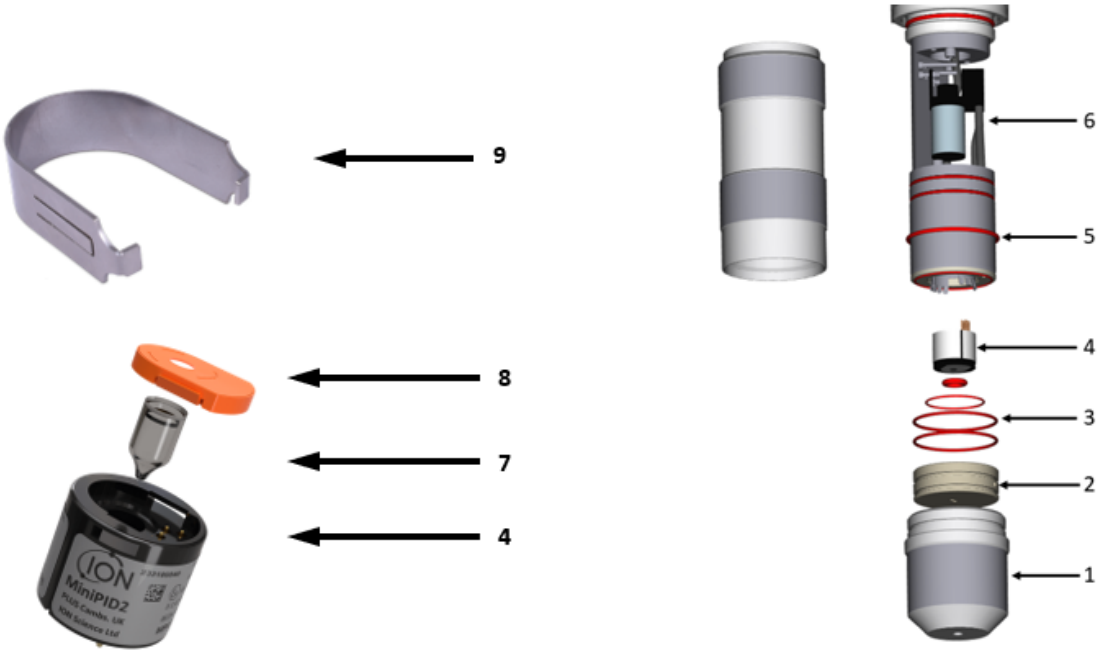

Item No	Description	Part Number
1	Sensor Cover	873206
2	O-Ring holder	873211
3	Replacement O-Ring kit	A-873227
4	MiniPID	MiniPID 2 Falco White - MP6SM6FWXU2 MiniPID 2 Falco Orange - MP6SM6FOXU2 MiniPID2 Falco TAC - MP6SXLFTXU2
5	Pump Housing O-Ring	Pump Housing O-Ring
6	Pump Replacement Kit	A-873228
7	MiniPID lamp	LA4SFL3.2
8	Orange electrode stack with seal (50 and 3000ppm)	A-846629
9	MiniPID removal tool	873250
	Falco^{TAC} electrode stack (50ppm)	A-846767
	Electrode stack removal tool – Used to remove stack from the MiniPID Sensor	846216
	PID Lamp Cleaning Kit- Contains Alumina powder and 40 cotton buds	A-31063
	White electrode stack with seal (10 and 1000ppm)	A-846627

Bump Test

The accuracy of the measurements can be easily checked at any time. ION Science recommends performing regular Bump Test on the FALCO 2 instruments to ensure the instrument responds correctly and that the alarm indicators activate properly when gas is detected at the specified alarm levels. Bump tests should also be conducted whenever these alarm levels are changed.

A calibration is recommended when the instrument response is close to or out of specification to detects and correct deviations, ensuring instruments provide reliable results.

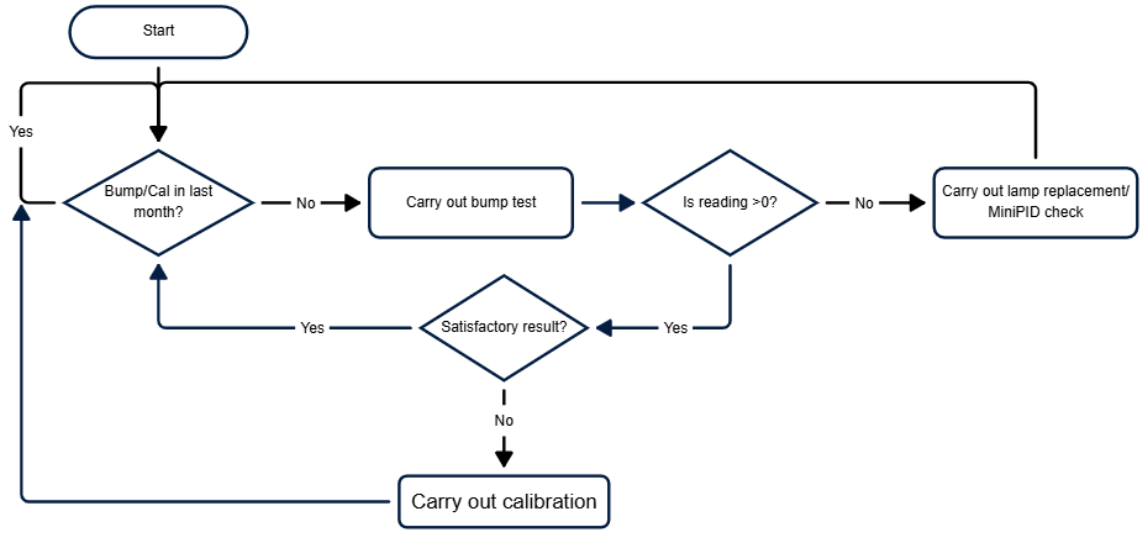

Figure 1 - Falco 2 recommended procedure for bump testing and calibration

WARNING
Relays and the 4-20 mA current will to continue to operate as per normal operation this may NOT equal current environmental conditions. This can lead to false alarms if precautionary measures are taken into consideration.

Before starting the bump test process, please ensure you have the following equipment ready for use.

- Magnetic Actuator (part no. 873202)
- Span gas
- Suitable tubing to connect gases to FALCO 2 calibration adapter (part no. A-873201)
- Fixed Flow Regulator (part no. 5/RP-04)
- Hydrophobic Filter (part no. A-873273) (pumped version only)
- Demand Flow Regulator (part no. 5/RD-01) (pumped version only)
- Suitable tubing to connect gases to Falco
- Filter Disc (part no. 873210) (diffused version only)
- Fixed Flow Regulator (part no. 5/RP-04) (diffused version only)

Using the Span gas to verify the unit is within satisfactory reading (see speciation table for accuracy):

1) Attach the span gas cylinder to the FALCO 2.
2) Verify the FALCO 2 display updates
3) If the displayed result is out of specification/satisfactory reading:
    a. Carry out calibration procedure as detailed in Calibration section of this manual.
    b. If no result shown on display when applying gas may be caused by the lamp not striking or PID is not installed. Follow section of this manual to replace Lamp or insert PID. For further help contact your local service centre.

Cleaning the MiniPID

FALCO has been designed to ensure servicing is quick and easy:

1. Before servicing FALCO, set the device to Servicing Mode.
2. Unscrew the Sensor Cover (**1**) to access the MiniPID (**4**) located in the Sensor Housing.
3. Remove the MiniPID (**4**) using the MiniPID removal tool (9). Be careful when withdrawing it, don't twist when the MiniPID is in the Sensor Housing. Only light force is required.

CAUTION

Do not twist the MiniPID (**4**). While it is within the Sensor Housing.

4. Use the electrode stack removal tool to remove the electrode stack. Hold the MiniPID (**4**) upside down, the Electrode Stack (**8**) and PID Lamp (**7**) can then be removed.

CAUTION

Ensure the Electrode Stack (**8**) and PID Lamp (**7**) falls onto a soft surface such as a piece of tissue. This will avoid damaging the parts as they fall out and avoids finger contact with the PID Lamp window.

5. Clean the PID Lamp using the PID lamp cleaning kit (A-31063) **To clean the PID Lamp:**

- Open the vial of Aluminium Oxide polishing compound. With a clean cotton bud collect a small amount of compound.
- Use this cotton bud to polish the PID Lamp window. Use a circular action applying light pressure to clean the lamp window. Never touch the lamp window with fingers.
- Continue polishing until an audible "squeaking" is made by the cotton bud with compound moving over the window surface (usually within fifteen seconds).
- Remove the residual powder with short blast of air from the can of air duster.



INFORMATION

Contamination of the PID Lamp window can considerably reduce the detection capability of the MiniPID (**4**), even when the contamination is not visible. Cleaning of the lamp should be carried out on a regular basis depending on the PID Lamp (**7**) and the environment.

The humidity of the air and contaminants may affect the time required between servicing.

6. The Electrode Stack (**8**) should be inspected for visible signs of contamination, if contamination can be seen the Electrode Stack (**8**) must be replaced.

Reassembly

1. Lay the Electrode Stack (8) front face down on a clean, flat surface and then screw the lamp (7) down into the O-ring until it firmly abuts against the front electrode face.
2. Place the MiniPID (4) body carefully down over the lamp-stack sub-assembly so as not to disturb its seating within the electrode stack and then push the body firmly onto the face down Electrode Stack (8) so that both wings engage with the MiniPID (4) body.
3. Inspect the sensor to confirm that both wings of the electrode stack have engaged with the MiniPID (4) body.
4. Refit the sensor into the sensing instrumentation.
5. The Falco must be calibrated

CAUTION

Irreparable damage will be caused by forcing the MiniPID (**4**) into the Sensor Housing if not correctly aligned.

INFORMATION

Always calibrate the FALCO after servicing is carried out.

Use of PID Lamp Cleaning Kit A-31063

The container of cleaning compound contains Aluminium Oxide as a very fine power (CAS Number 1344-28-1).

The Compound has a TVL (TWA) of 10 mg/m^3 and a full material safety data sheet MSDS is available on request from Ion Science Ltd. The key issues are listed below:

Hazard identification:

May cause irritation of respiratory tract and eyes.

Handling:

- Do not breathe the vapour/dust
- Avoid contact with skin, eyes and clothing
- Wear suitable protective clothing
- Follow industrial hygiene practices;
  Wash face and hands thoroughly with soap and water after use and before eating, drinking, smoking or applying cosmetics
- Always replace the lid after using the cleaning compound.

Storage:

Keep container closed to prevent water adsorption and contamination.

Fault Diagnostics

Alarm and Fault Indications


Activated when Alarm 1 is exceeded.


Activated when Alarm 2 is exceeded.


Activated when a fault condition is raised.

Fault Conditions

The FALCO is equipped with a number of diagnostics to ensure instrument faults are detected and communicated. The table gives a fuller description of each fault and lists some possible causes and corrective actions you can try. If the fault continues, or is repeated, contact your Service Centre.

Displayed Fault Screen	Fault Description	Corrective Action
	If the user has exited the initial 30 minute warm up phase, this screen will be displayed for 7 seconds until the lamp has struck.	Wait until the lamp has struck and the instrument displays a reading. If the lamp does not strike replace it.
	The present gas concentration has 'over-ranged' the instrument. The instrument can't display readings greater than 19999 (3000ppm) or 1999.9 (1000ppm) or 199.99 (50ppm) or 19.999 (10ppm).	Wait until gas concentration returns to lower levels and the instrument reading reappears.
	The lamp is not lit during a measurement cycle or PID is not installed.	Replace Lamp or insert PID
	The analogue to digital converter has stopped working.	Contact Service Centre.
	If error 3 occurs, the Falco's lamp hasn't struck.	Make sure the Sensor Cover is screwed on correctly.. Replace lamp if error persists.
	Low System Flow Rate	Check the sample line for blockages. Also check the hydrophobic filter for a large ingress of water. If the filter has water in, eliminate the source of the water (where possible) and replace the filter.
	Analogue to digital converter has stopped working.	Contact Service Centre.
	Flow System Blocked	Check the sample line for blockages. Also check the hydrophobic filter for a large ingress of water. If the filter has water in, eliminate the source of the water (where possible) and replace the filter.

Manual Log

Manual Version	Amendment	Issue Date	Instrument Firmware	PC Software
1.0	First Issue	06/03/2018	1.0	n/a
1.1	Updated to include Falco^{TAC}	20/01/2019	2.1c	n/a
1.2	p11 – table amended, p35-37 – servicing section updated Rhys – put in new format, changes to screenshot, grammar & spelling, changed Menu i3 from pulse duration to measurement cycle. Added spare parts to spare parts section. Added information on hydrophobic filter.	14/02/2020	2.1d	n/a
1.2R	Updated Declaration of Conformity	18/12/2020	2.1d	n/a
1.3	Updated relay latching menu so is correctly described. Added section on regular bump testing. DoC and Certification FTZÚ removed from user manual.	01/12/2025	2.4.6	n/a

Disclaimer: Information in this manual is subject to change without notice and does not represent a commitment on the part of Ion Science. No claims, promises or guarantees are made about the accuracy, completeness, or adequacy of the information contained herein.

Warranty

Register your instrument online for extended warranty

Thank you for purchasing your ION Science instrument.

The standard warranty of your FALCO 1.2 VOC Monitor is for one year.

To receive your extended warranty, you must register your instrument online within one month of purchase (terms and conditions apply.)

ION Science Contact Details

ION Science Ltd – UK/Head Office

Tel: +44 (0)1763 208 503

Web: www.ionscience.com | Email: info@ionscience.com

ISM ION Science Messtechnik – Germany Office

Tel: +49 (0) 2104 1448-0

Web: https://www.ism-d.de/en/ | Email: sales@ism-d.de

ION Science India - India Office

Tel: +914048536129

Web: www.ionscience.com/in | Email: kschari@ionscience.com

ION Science Inc – USA Office

Tel: +1 877 864 7710

Web: https://ionscience.com/usa/ |Email: info@ionscienceusa.com

ION Science Italy - Italy Office

Tel: +39 051 0561850

Web: www.ionscience.com/it | Email: info@ionscience.it

ION Science China - China Office

Tel: +86 21 52545988

Web: www.ionscience.com/cn | Email: info@ionscience.cn